RADIK COMBI VK

Steel panel radiator for combined heating



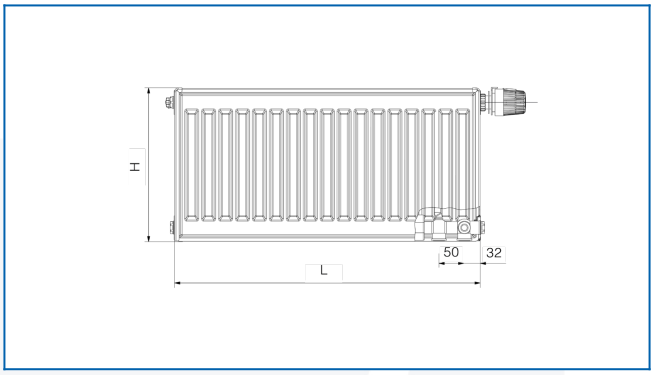

Entered filters

Heat output: t_1: 75 °C | t_2: 65 °C | t_i: 20 °C | Δt: 50 °C

